ZANJAN
SADAF GOSTAR co.
IRAN TRANSFO CORPORATION

Z.I.C

Zanjan Sadaf Gostar Co.

جعبه تقسیم ترانس جریان

C.T. Terminal Box

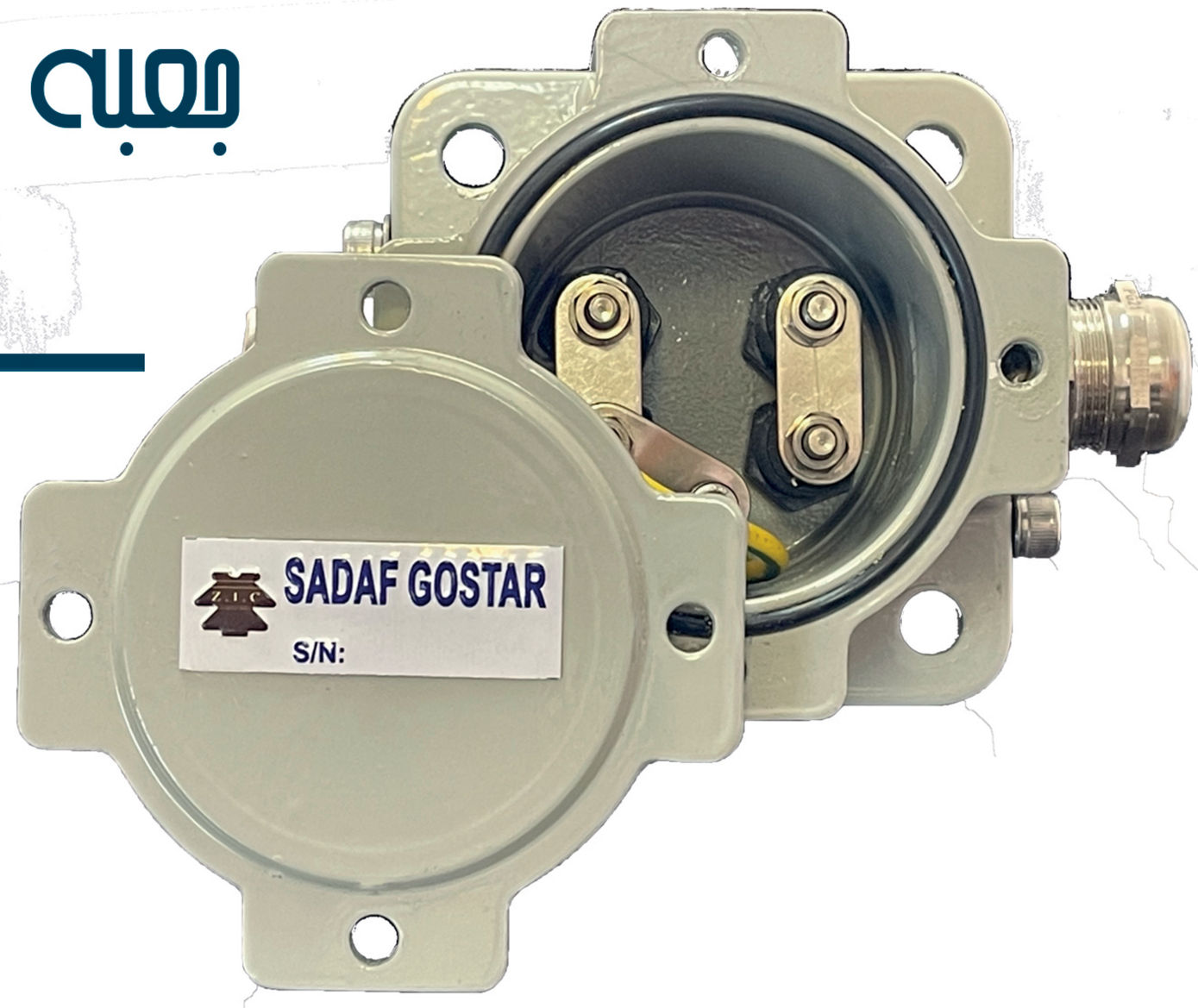

- Terminals up to 6
- Protection degree: IP65
- Terminal box body: Aluminum
- Terminals: Polyamide 6.6
- Powder coat with polyester resin according to the ITQ-MP03-01 standard for air side.

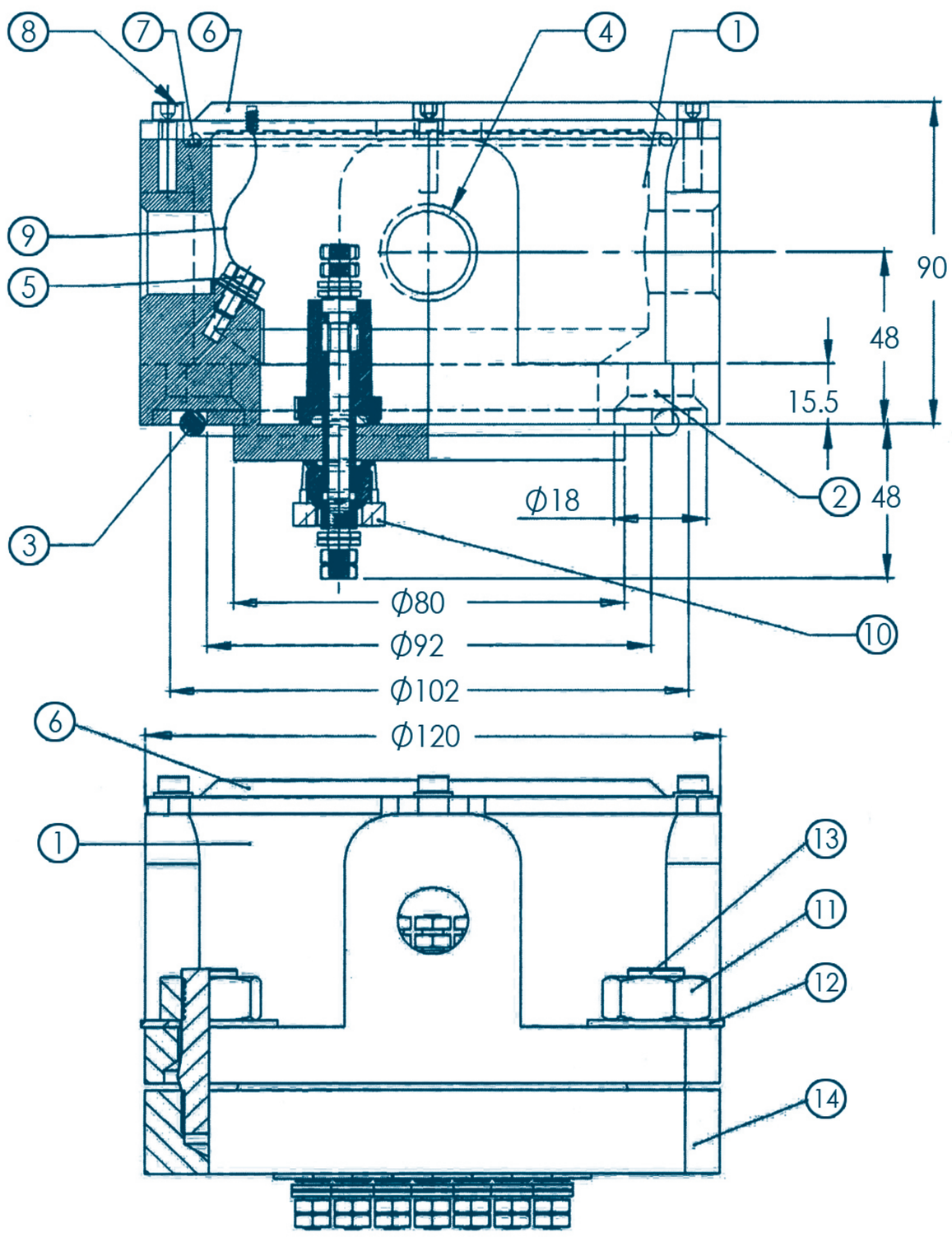

Part No.	Description	
1	Terminal box body	Aluminum
2	Mounting flange	
3	O-ring Ø92.5x5	NBR
4	Cable Entry	PG21
5	Earth Screws	A2-70
6	Terminal box cover	Aluminum
7	Cover O-ring	NBR
8	Cover Screws	A2-70
9	Cover holding string	1x4 (150mm)
10	Terminals	Polyamide 6.6
11	M10-Hex nut	A2-70
12	M10-Washer	A2-70
13	M10x25 DIN938	Ss304
14	Flange (not supplied)	S235JR

TIGHTNESS TEST:

A) With Oil Pressure Of 1 bar,90°C,30′

B) With Air Pressure Of 2.5 bar,1min (under water)

Sohravardi Ave.-Industrial Township No.1-Zanjan-Iran
WWW.ZSGINSULATOR.IR
Phone: +98 24 3222 1771-2 +98 24 32221317
Fax: +98 24 3222 1773
info@zsginsulator.ir

Rev.2017-00